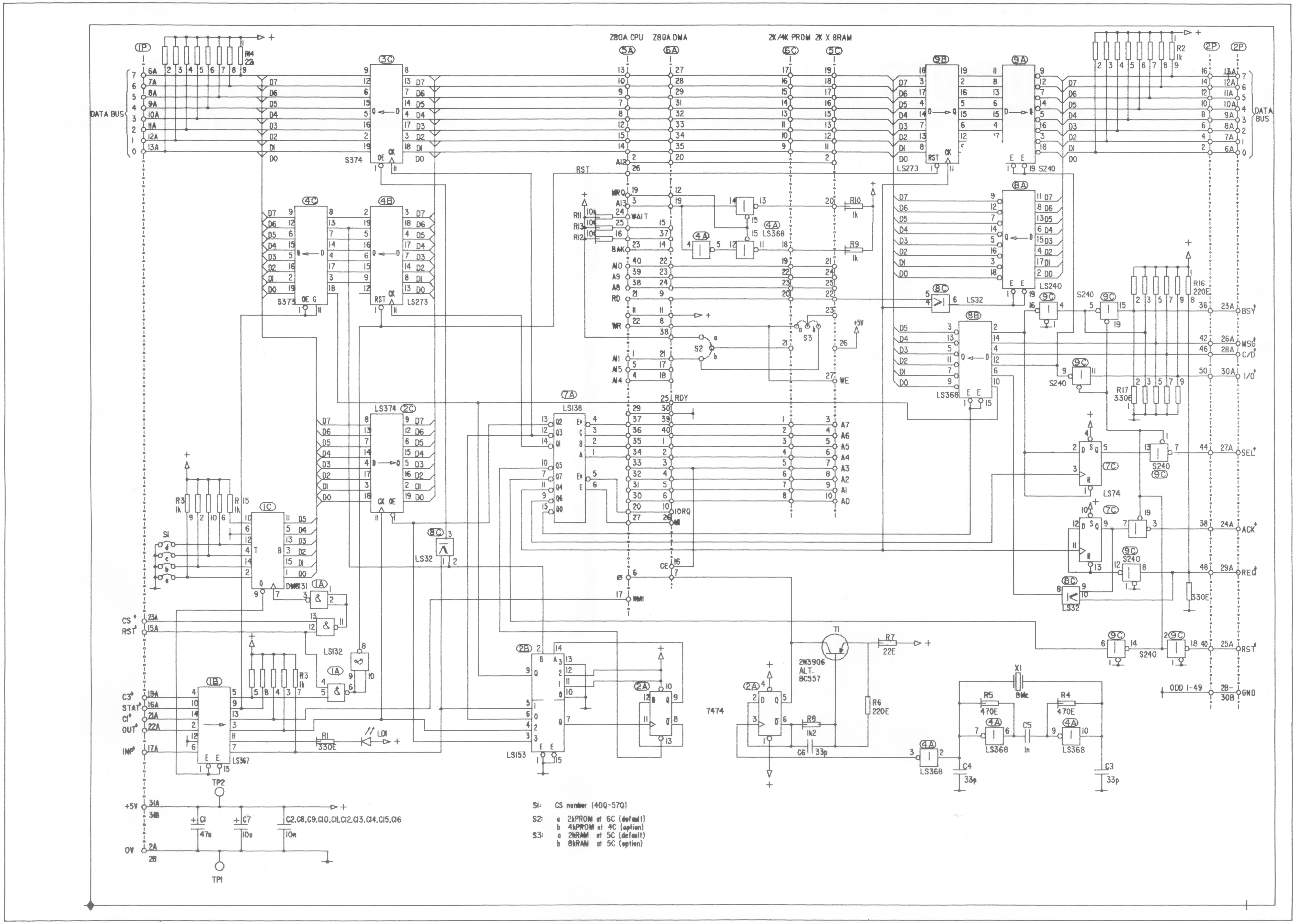

66 81056-01
HOST ADAPTER,XEBEC INTERFACE
55 21056-00
LUXOR DATORER AB,MOTALA
SWEDEN

© COPYRIGHT 1985